DC Brushless Centrifugal Fans
直流无刷离心风机 Φ250

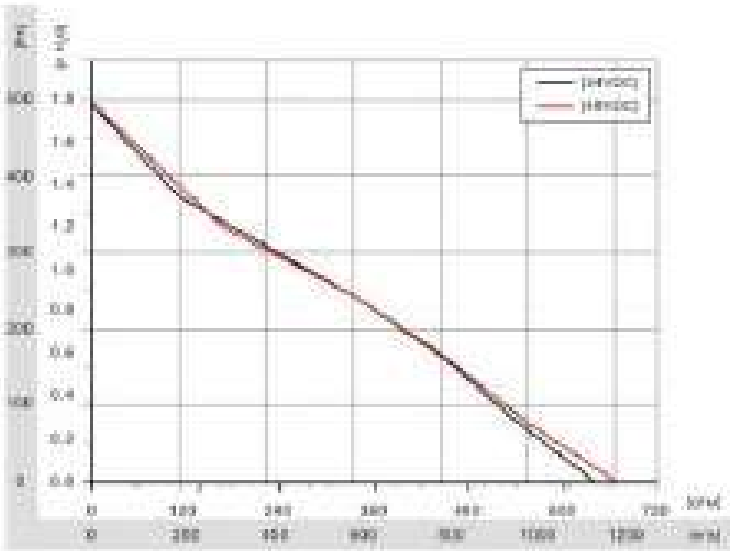

Material: Impeller completely made of plastic PA66
Technical features: Control input 0~10 VDC/PWM,
Motor protect: Tach output, locked-rotor protection, current limited soft start
Bearing: Ball bearing
Motor Insulation Class: F
Approvals: CCC、CE、UL、TUV

风轮采用PA66塑料制成
采用0~10VDC控制电压或脉冲宽调制
具有速度反馈输出、堵转、限流保护、软启动等功能
采用滚珠轴承
绝缘等级：F
产品符合的认证：CCC、CE、UL、TUV
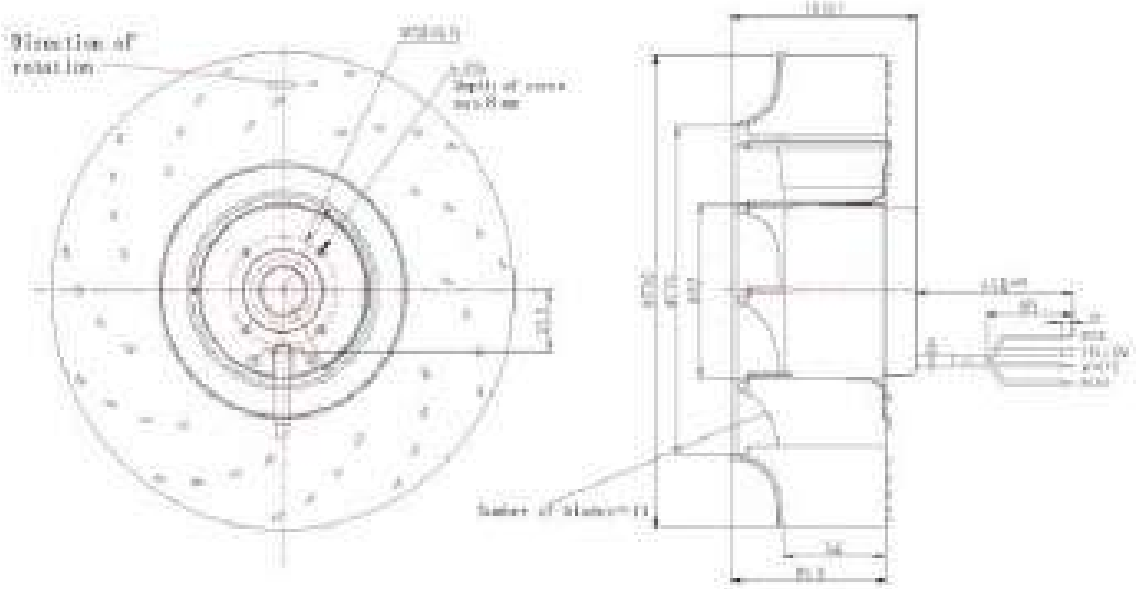
Model	Nominal Voltage (VDC)	Voltage Range (VDC)	Airflow (m³/h)	Speed (rpm)	Power (W)	Noise dB(A)	Current (A)	Amb. Temp (°C)
SC250D3-DC0	24	16~28	1160	2130	56	68	3.6	-25~+60
SC250D3-DF0	48	36~57	1200	2200	96	72	2.0	-25~+60